Building Inspection Division
THESE PLANS HAVE BEEN REVIEWED FOR COMPLIANCE WITH THE CURRENT EDITION OF THE FLORIDA BUILDING CODE
Lakeland
Date: 11/15/19
Permit Number: BLD19-06035

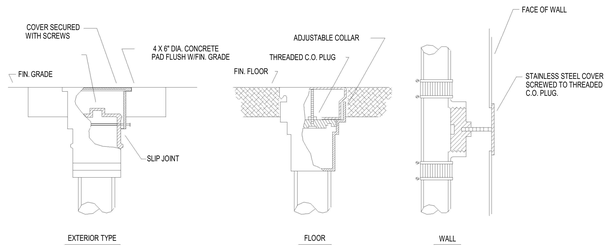

CLEANOUTS MAY NOT SHOW ON DRAWINGS BUT MUST BE INSTALLED IN THE FOLLOWING CIRCUMSTANCES:
- EVERY 50 FEET OF SANITARY RUN.
- THE END OF EVERY SANITARY LINE BRANCH/RUN (NOT INCLUDING INDIVIDUAL FIXTURE RUNS).

1 CLEANOUTS
NTS

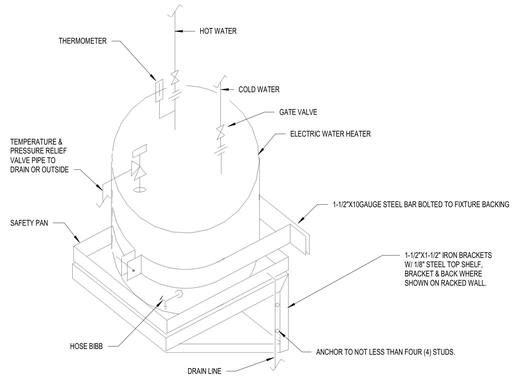

NOTE:
TYPICAL WH MOUNTING METHOD IS PER MANUFACTURER'S RECOMMENDATIONS (INCLUDING SAFETY PAN) FOR WALL HUNG UNITS ONLY. WH UNITS THAT ARE NOT SUSPENDED OR WALL MOUNTED SHALL BE INSTALLED WITH A PAD. PROVIDE SAFETY PAN FOR WATER HEATER WITH DRAIN LINE ROUTED TO MOP SINK. PROVIDE AND INSTALL PANS PER FLORIDA PLUMBING CODE. (TYPICAL FOR WATER HEARERS AT PTSA)

8 WALL MOUNTED WATER HEATER
NTS

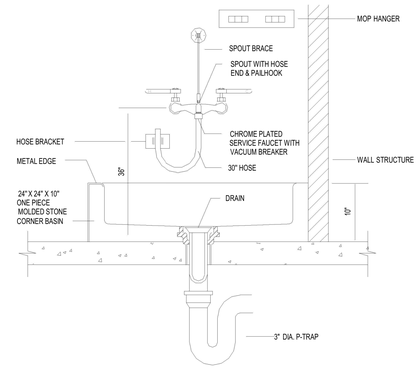

3 MOP SINK DETAIL
NTS

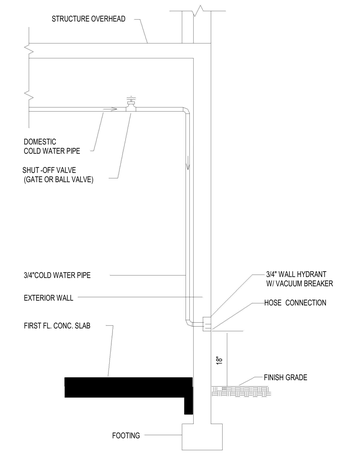

2 EXTERIOR WALL HYDRANT
NTS

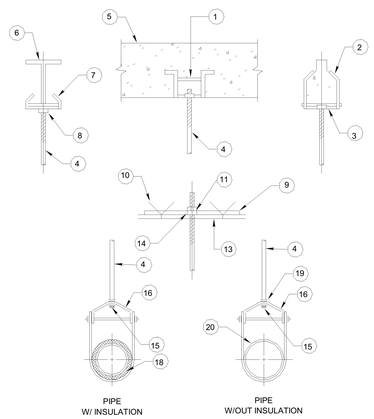

NOTES:

1. HEAVY DUTY CONCRETE STEEL INSERT WITH ELONGATED STRAP.
2. CONCRETE JOIST SEE PROJECT PLANS.
3. HEAVY DUTY CONCRETE JOIST CLAMP.
4. HANGER ROD
5. CONCRETE SLAB SEE PROJECT PLANS.
6. STRUCTURAL STEEL BEAMS SEE PROJECT PLANS FOR SIZE.
7. HEAVY DUTY BEAM CLAMP.
8. EYE SOCKET
9. ONE ANGLE ON EACH SIDE OF WEB MEMBERS REST ON BOTTOM CHORDS GWSN BETWEEN PANEL POINTS. SIZE FOR LOAD.
10. WEB MEMBERS
11. HANGER NUT
12. WELDS
13. BOTTOM CHORD
14. BENT STRAP 1 1/2" 3/16" OVER VERTICAL LESS ANGLES.
15. SUPPORT NUT
16. HEAVY DUTY CLEVIS HANGER
17. INSULATION WHERE SPECIFIED SHALL BUTT AGAINST PIPE HANGERS.
18. PIPE
19. LOCKING NUT
20. BARRIER INSULATION

NOMINAL PIPE SIZE		1	1 1/4	1 1/2	2	2 1/2	3	3 1/2	4	5	6	8	10	12	14	16	18
	STEEL PIPE	7	7	9	10	11	12	13	14	16	17	19	20	23	25	27	28
	PVC PIPE	9	9	12	13	14	15	16	17	19	21	24	26	30	32	35	37
HANGER RODS	RECOMMENDED DIAMETER	3/8				1/2			5/8		3/4			1			
	MAX. RATED LOAD	610				1130			1810		2710			4960			

4 PIPE SUPPORT DETAIL
NTS

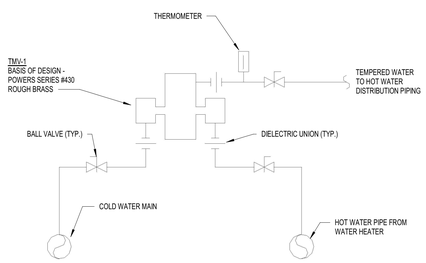

7 THERMOSTATIC MIXING VALVE
NTS

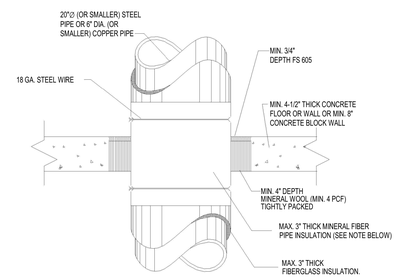

NOTE:
1. PAROC 1200 MINERAL FIBER PIPE INSULATION TO EXTEND 6" ABOVE AND BELOW FLOOR. SECURE W/ TIE WIRE AS SHOWN. COVER W/ A U.L. CLASIFIED ALL SERVICE JACKET AND PROPERLY JOINT IT W/ EXISTING INSULATION.
2. ANNULAR SPACE = MIN. 1", MAX. 2-1/4"
3. WALLS REQUIRE 3/4" DEPTH OF FS 605 ON BOTH SIDES

F RATING = 2-HR
T RATING = 1-HR

PROTOTYPE: HILTI

U.L. SYSTEM No. CAJ5091
INSULATED PIPE TROUGH SLEEVE

6 WALL & FLOOR PENETRATION
NTS

NOTE:
THIS DETAIL APPLICABLE FOR RESEALING OF ALL TOILET ROOM FLOOR DRAINS BY MEANS OF A JOSAM 88250 PRIME VALVE INSTALLED IN THE C.W. SUPPLY LINE OF THE NEAREST LAVATORY A SLOPED TO THE FLOOR DRAIN

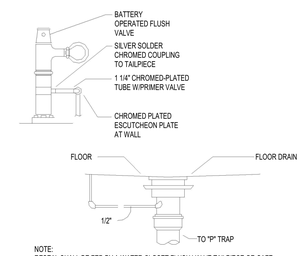

NOTE:
RESEAL SHALL BE FED BY A WATER CLOSET FLUSH VALVE TAILPIECE OR SAFE WASTED FROM AN ELECTRIC COOLER OR DRINKING FOUNTAIN. RESEALERS FED FROM LAVATORIES OR SINKS SHALL ONLY BE USED WHERE NO SUITABLE WATER CLOSET, ELECTRIC WATER COOLER, OR DRINKING FOUNTAIN IS WITHIN 30 FEET.

5 TRAP RESEAL
NTS

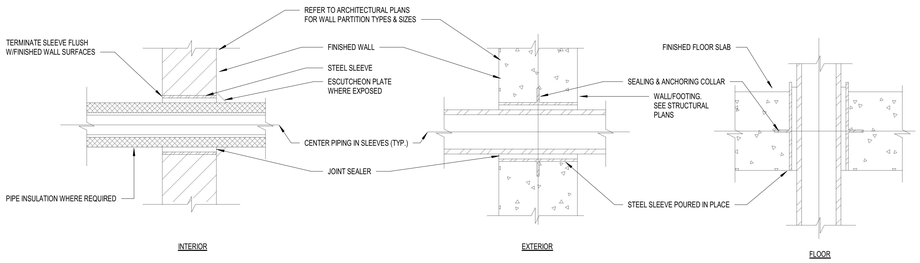

9 PIPE SLEEVES
NTS

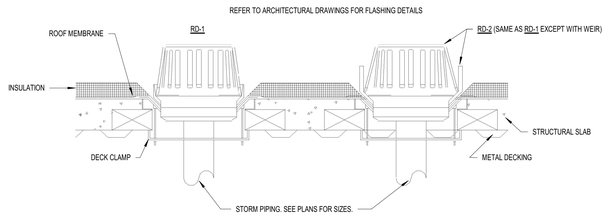

10 ROOF DRAIN & OVERFLOW
NTS

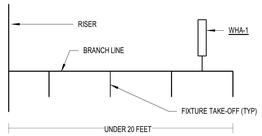

RULE 1: BRANCH LINES OF 20 FEET OR LESS
WHA-1 SHALL BE PLACED AT THE END OF THE BRANCH LINE BETWEEN THE LAST TWO FIXTURES SERVED AS SHOWN BELOW.

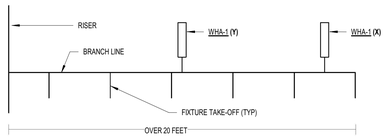

RULE 2: BRANCH LINES OVER 20 FEET
AN ADDITIONAL WHA-1 (Y) SHOULD BE PLACED AS SHOWN (BELOW). THE ADDITIONAL UNIT SHOULD BE PLACED AT THE MIDPOINT OF THE RUN LONGER THAN 20 FEET. THE SUM OF THE FIXTURE UNIT RATINGS OF UNITS X AND Y COMBINED, SHOULD BE EQUAL TO OR GREATER THAN THE DEMAND OF ALL BRANCHES.

11 WATER HAMMER ARRESTOR DETAIL
NTS

AECOM
CONSTRUCTION

PROJECT

PUBLIX HEADQUARTERS BUILDING ADDITION AND PARKING LOT EXPANSION

3300 PUBLIX CORPORATE PARKWAY
LAKELAND, FL 33811

CLIENT

Publix

3300 PUBLIX CORPORATE PARKWAY
LAKELAND, FL 33811

www.publix.com

CONSULTANT

AECOM

AECOM TECHNICAL SERVICES INC.
800 Douglas Entrance
North Tower, 2nd Floor
Coral Gables, FL 33134
305.444.4691 tel 305.447.3580 fax
www.aecom.com

ARCHTIECTURE
LICENSE NO. AA260000687

ENGINEERING
CA LIC. NO. 8115

www.aecom.com

REGISTRATION

JOHN TYE RECTOR
LICENSE
No. 53292
STATE OF
FLORIDA
PROFESSIONAL ENGINEER

JOHN T. RECTOR, PROFESSIONAL ENGINEER, STATE OF FLORIDA, LICENSE NO. 53292
08/22/19

John T Rector
John T Rector
2019.08.22
15:50:00 -04'00'

THIS ITEM HAS BEEN DIGITALLY SIGNED AND SEALED BY JOHN T. RECTOR, PROFESSIONAL ENGINEER, STATE OF FLORIDA, LICENSE NO. 53292 ON THE DATE ADJACENT TO THE SEAL. PRINTED COPIES OF THIS DOCUMENT MUST BE VERIFIED ON ANY ELECTRONIC COPIES.

NOTICE: THE OFFICIAL RECORD OF THIS SHEET IS THE ELECTRONIC FILE SIGNED AND SEALED UNDER RULE 61G15-23.004, F.A.C.

ISSUE/REVISION

I/R	DATE	DESCRIPTION
	AUG 23, 2019	CONSTRUCTION DOCUMENTS
	MAY 31, 2019	35% DESIGN COMPLETION

PROJECT NUMBER
60601397

SHEET TITLE
PLUMBING DETAILS

SHEET NUMBER
P0-0-02

Printed on ___% Post-Consumer Recycled Content Paper
©2016 AECOM Corporation